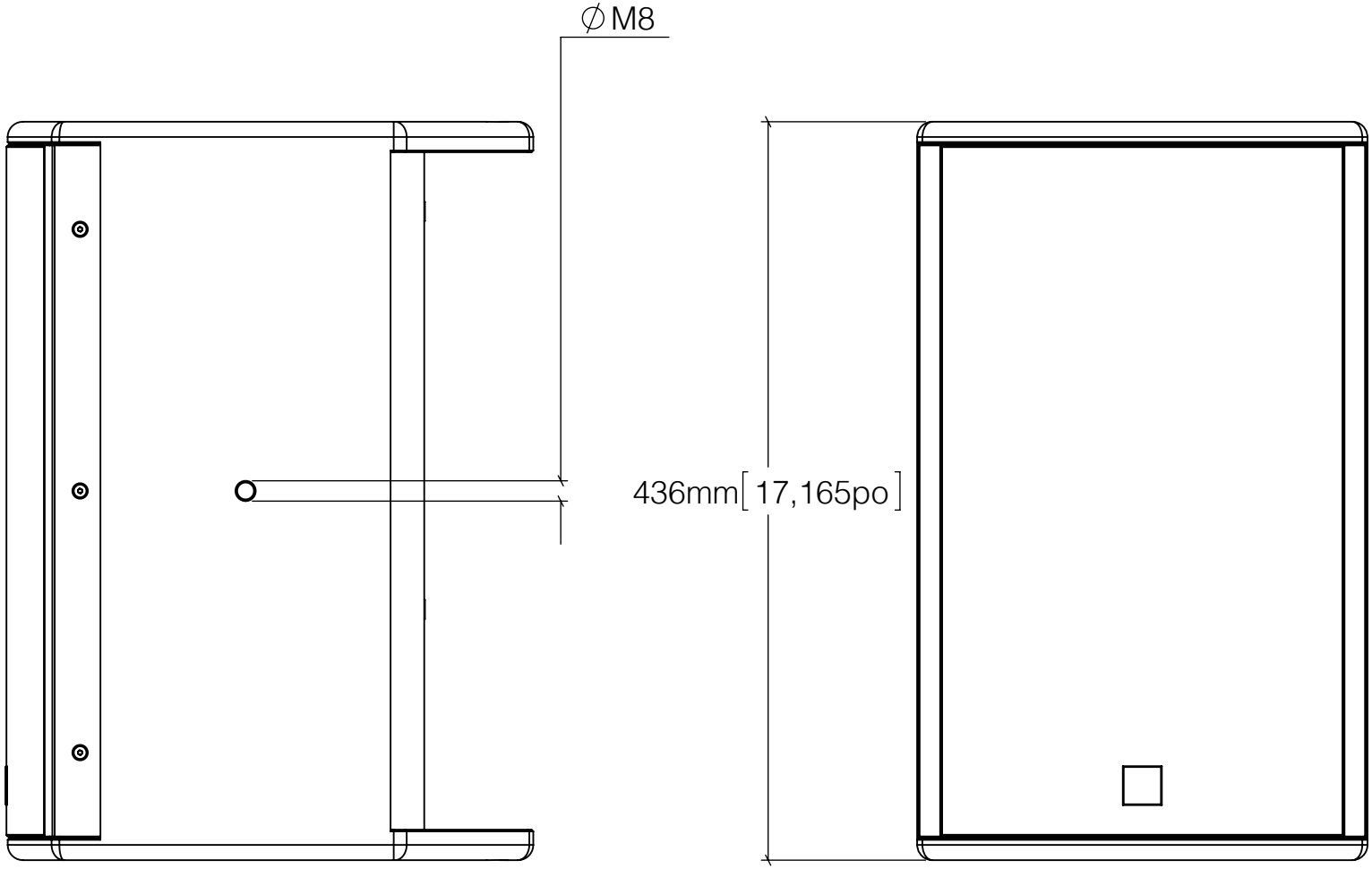

Amadeus is a registered trademark of Atelier 33. All rights reserved.
18 Rue Marc Seguin 77290 Compans (France)
Main : 00 33 (1) 64 67 02 47 - Fax : 00 33 (1) 64 67 20 00 - E-mail : info@amadeusaudio.fr - Website : www.amadeusaudio.fr

Project :	Drawn by : AMADEUS	
Material :	Name : UDX 8	Sheet 1 of 4
Weight :	Scale 1:4	Date : 19/03/2018

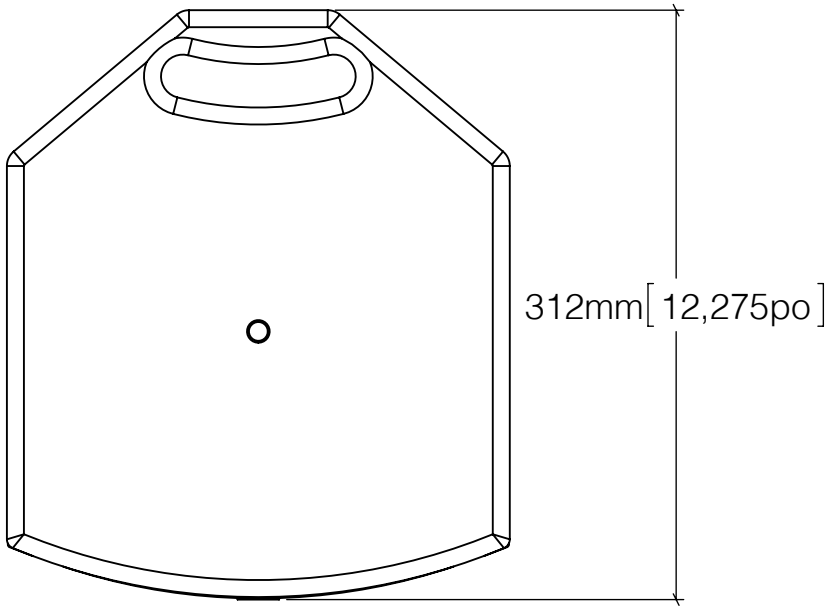

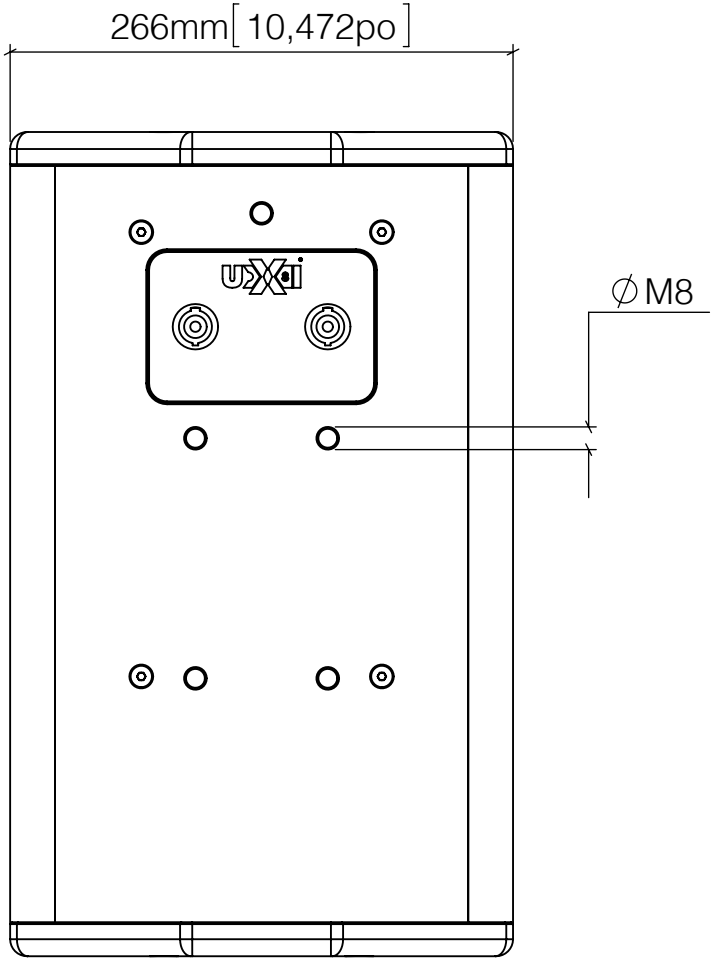

Amadeus is a registered trademark of Atelier 33. All rights reserved.
18 Rue Marc Seguin 77290 Compans (France)
Main : 00 33 (1) 64 67 02 47 - Fax : 00 33 (1) 64 67 20 00 - E-mail : info@amadeusaudio.fr - Website : www.amadeusaudio.fr

Project :	Drawn by : AMADEUS	
Material :	Name : UDX 8	Sheet 2 of 4
Weight :	Scale 1:4	Date : 19/03/2018

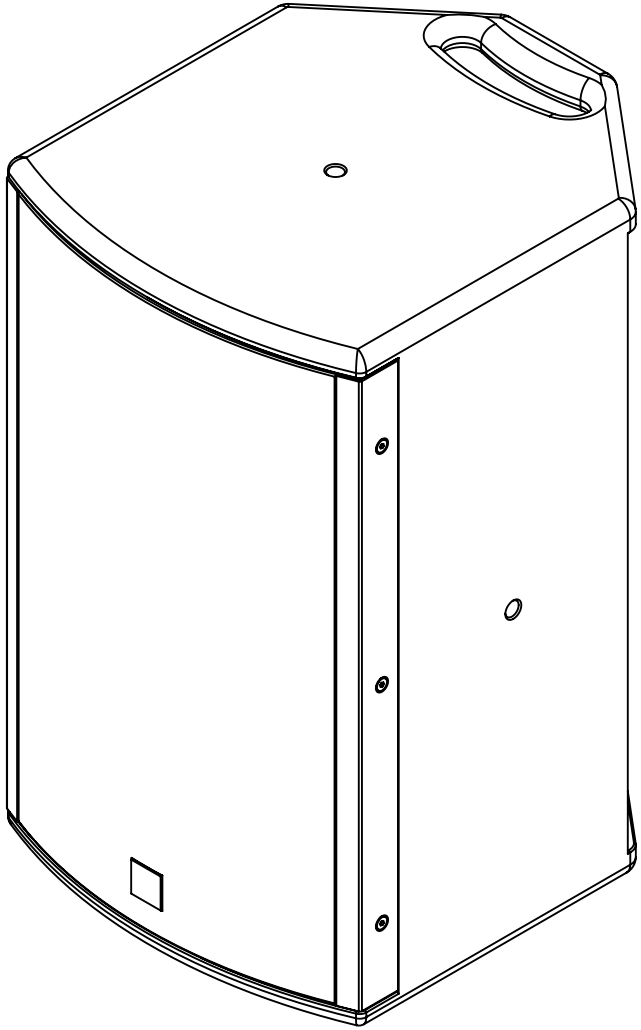

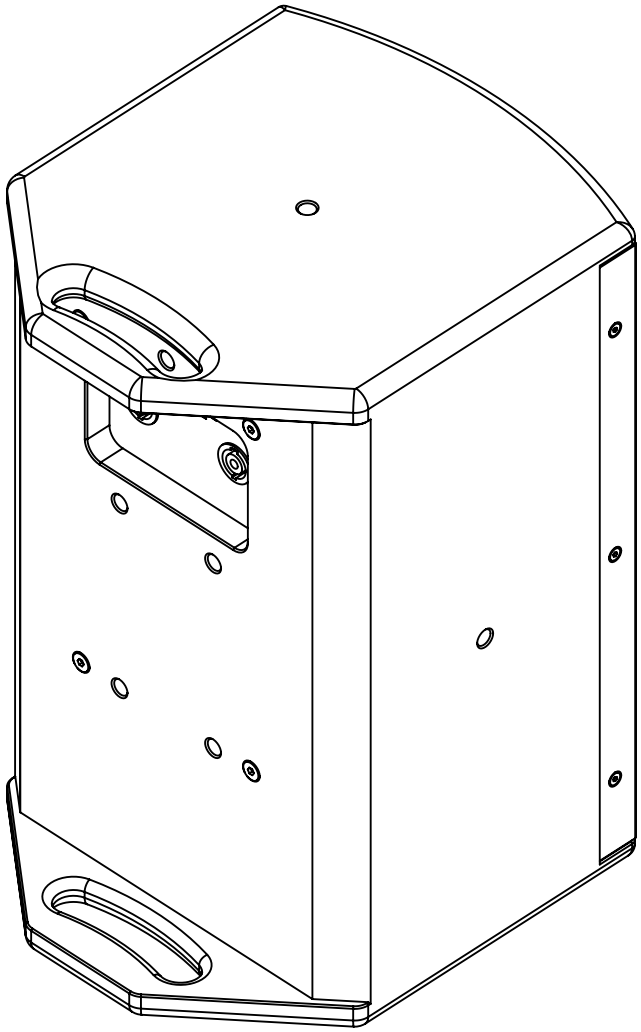

AMADEUS

Amadeus is a registered trademark of Atelier 33. All rights reserved.
18 Rue Marc Seguin 77290 Compans (France)
Main : 00 33 (1) 64 67 02 47 - Fax : 00 33 (1) 64 67 20 00 - E-mail : info@amadeusaudio.fr - Website : www.amadeusaudio.fr

Project :	Drawn by : AMADEUS	
Material :	Name : UDX 8	Sheet 3 of 4
Weight :	Scale 1:4	Date : 19/03/2018

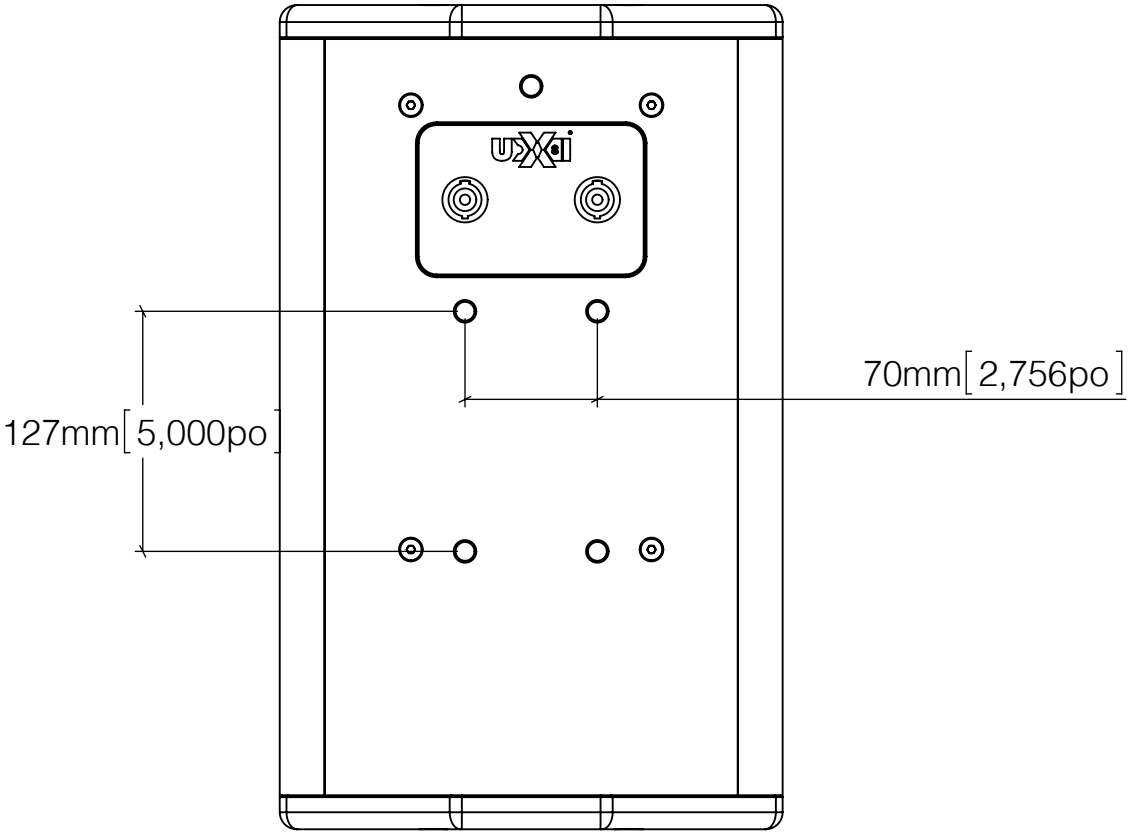

Amadeus is a registered trademark of Atelier 33. All rights reserved.
18 Rue Marc Seguin 77290 Compans (France)
Main : 00 33 (1) 64 67 02 47 - Fax : 00 33 (1) 64 67 20 00 - E-mail : info@amadeusaudio.fr - Website : www.amadeusaudio.fr

Project :	Drawn by : AMADEUS	
Material :	Name : UDX 8	Sheet 4 of 4
Weight :	Scale 1:4	Date : 19/03/2018